4. Ground Circuit

A: WIRING DIAGRAM

1. CHASSIS GROUND

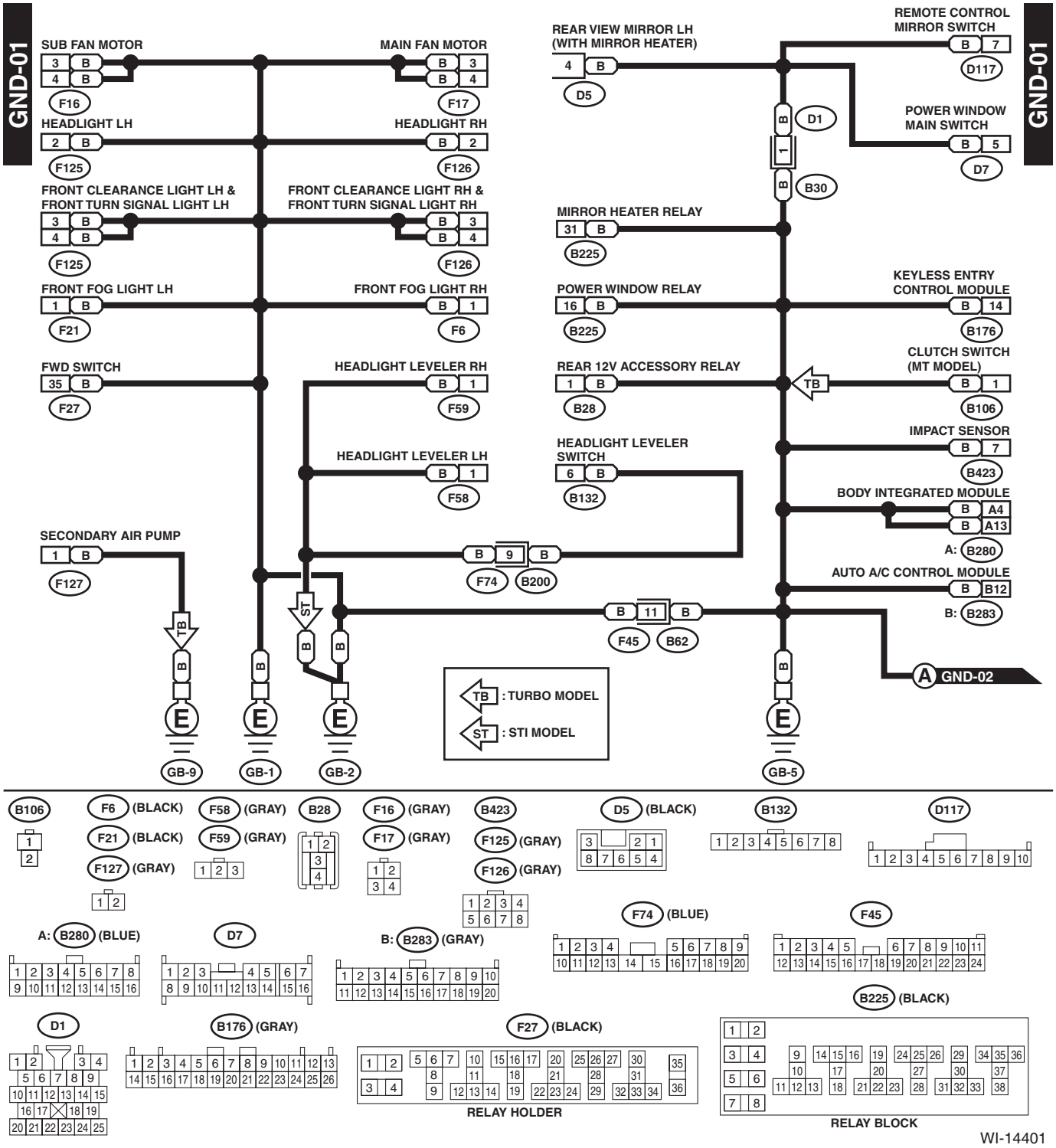

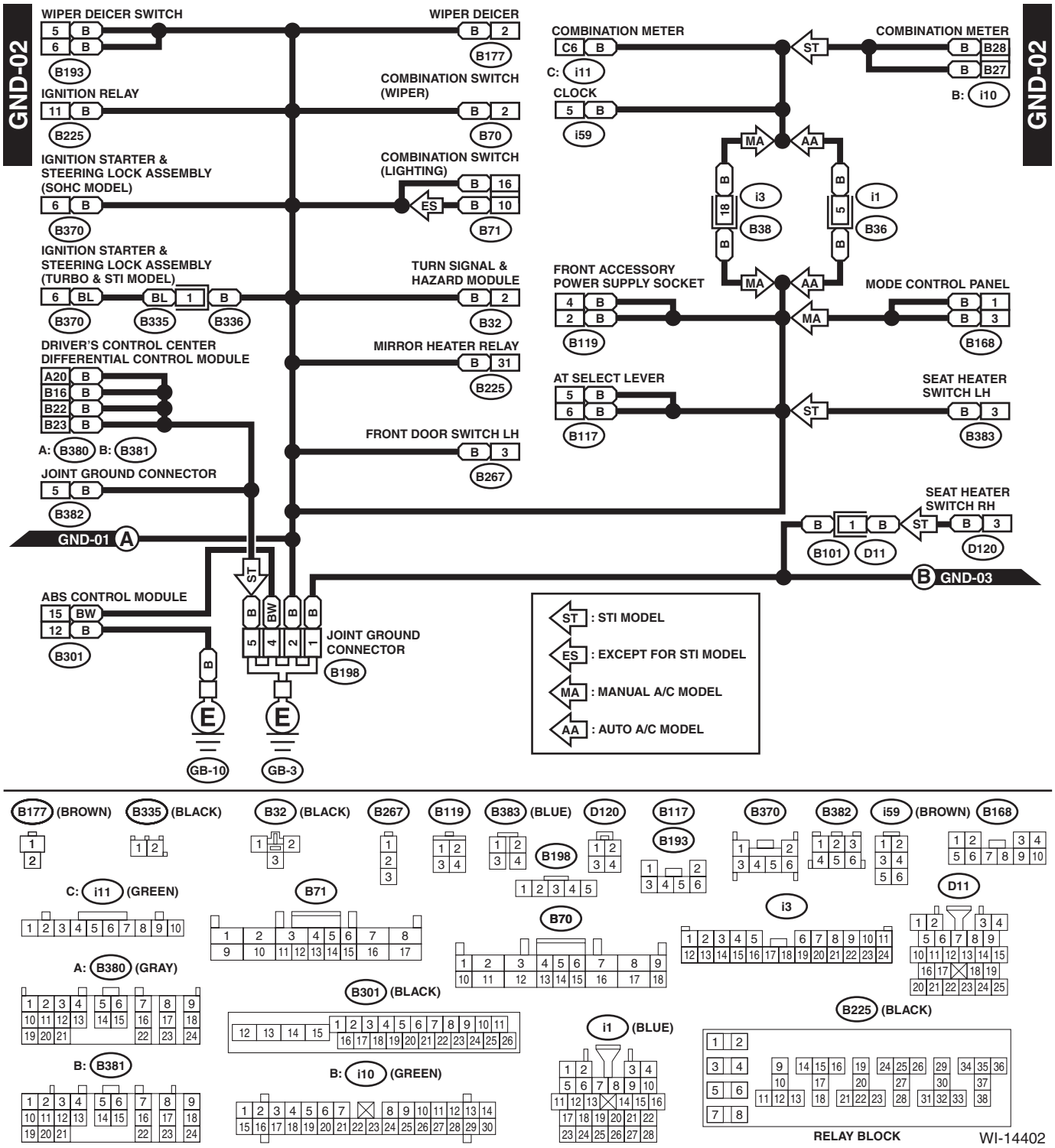
GND-02
WIPER DEICER SWITCH
B193
WIPER DEICER
B177
IGNITION RELAY
B225
COMBINATION SWITCH (WIPER)
B70
IGNITION STARTER & STEERING LOCK ASSEMBLY (SOHC MODEL)
B370
COMBINATION SWITCH (LIGHTING)
B71
IGNITION STARTER & STEERING LOCK ASSEMBLY (TURBO & STI MODEL)
B370
B335
B336
TURN SIGNAL & HAZARD MODULE
B32
DRIVER'S CONTROL CENTER DIFFERENTIAL CONTROL MODULE
A: B380 B: B381
MIRROR HEATER RELAY
B225
FRONT DOOR SWITCH LH
B267
JOINT GROUND CONNECTOR
B382
GND-01 A
ABS CONTROL MODULE
B301
JOINT GROUND CONNECTOR
B198
GB-10
GB-3
COMBINATION METER
C: i11
CLOCK
i59
COMBINATION METER
B: i10
GND-02
i3
B38
i1
B36
FRONT ACCESSORY POWER SUPPLY SOCKET
B119
MODE CONTROL PANEL
B168
AT SELECT LEVER
B117
SEAT HEATER SWITCH LH
B383
SEAT HEATER SWITCH RH
B101
D11
D120
B GND-03
ST : STI MODEL
ES : EXCEPT FOR STI MODEL
MA : MANUAL A/C MODEL
AA : AUTO A/C MODEL
B177 (BROWN)
B335 (BLACK)
B32 (BLACK)
B267
B119
B383 (BLUE)
D120
B117
B193
B370
B382
i59 (BROWN)
B168
C: i11 (GREEN)
B71
B198
B70
i3
D11
A: B380 (GRAY)
B301 (BLACK)
i1 (BLUE)
B225 (BLACK)
B: B381
B: i10 (GREEN)
RELAY BLOCK
WI-14402

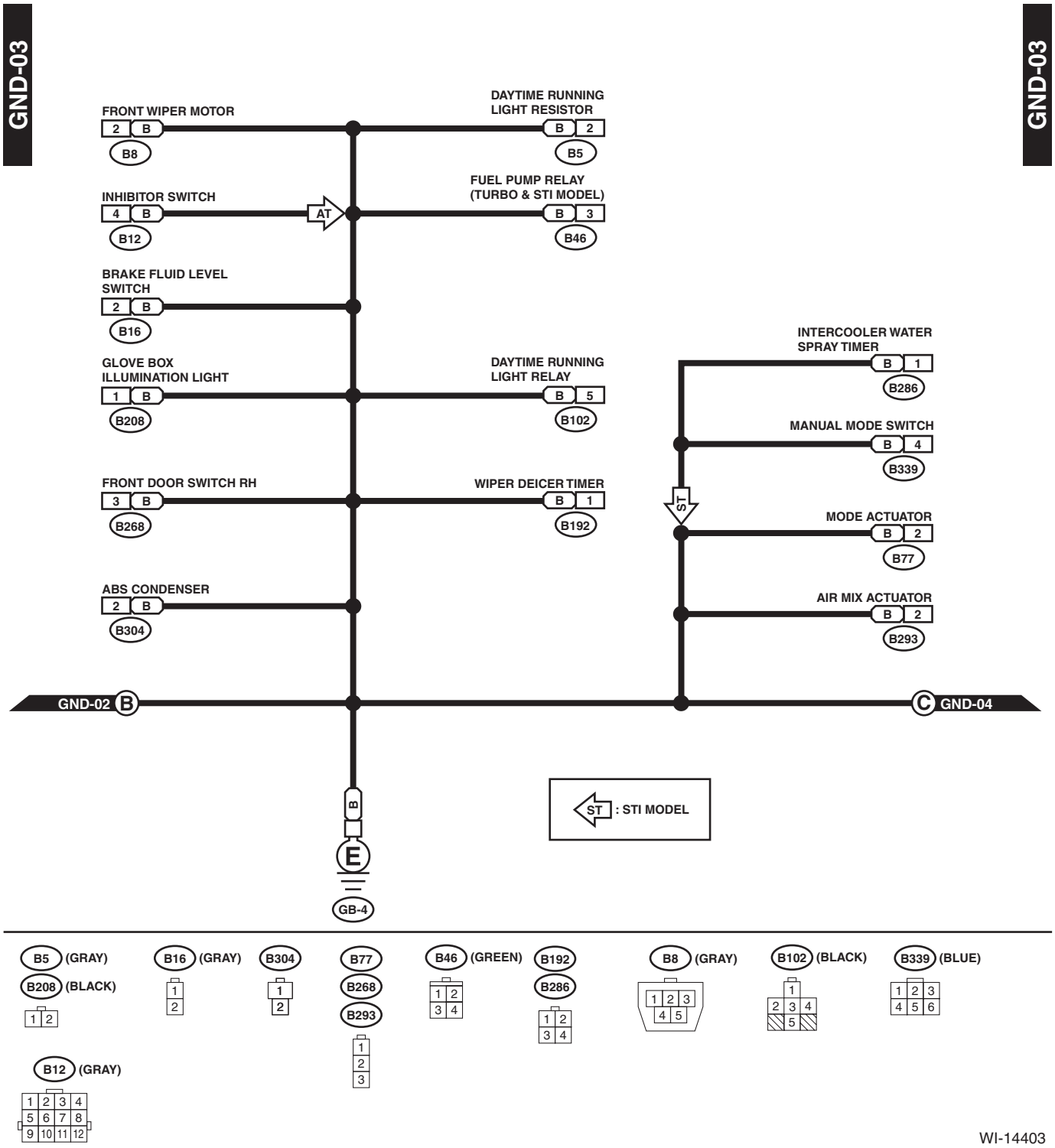
GND-03
GND-03
FRONT WIPER MOTOR
2 B
B8
DAYTIME RUNNING LIGHT RESISTOR
B 2
B5
INHIBITOR SWITCH
4 B
B12
AT
FUEL PUMP RELAY (TURBO & STI MODEL)
B 3
B46
BRAKE FLUID LEVEL SWITCH
2 B
B16
GLOVE BOX ILLUMINATION LIGHT
1 B
B208
DAYTIME RUNNING LIGHT RELAY
B 5
B102
INTERCOOLER WATER SPRAY TIMER
B 1
B286
MANUAL MODE SWITCH
B 4
B339
FRONT DOOR SWITCH RH
3 B
B268
WIPER DEICER TIMER
B 1
B192
ST
MODE ACTUATOR
B 2
B77
ABS CONDENSER
2 B
B304
AIR MIX ACTUATOR
B 2
B293
GND-02 B
C GND-04
B
E
GB-4
ST : STI MODEL
B5 (GRAY)
B208 (BLACK)
B16 (GRAY)
B304
B77
B268
B293
B46 (GREEN)
B192
B286
B8 (GRAY)
B102 (BLACK)
B339 (BLUE)
B12 (GRAY)
WI-14403

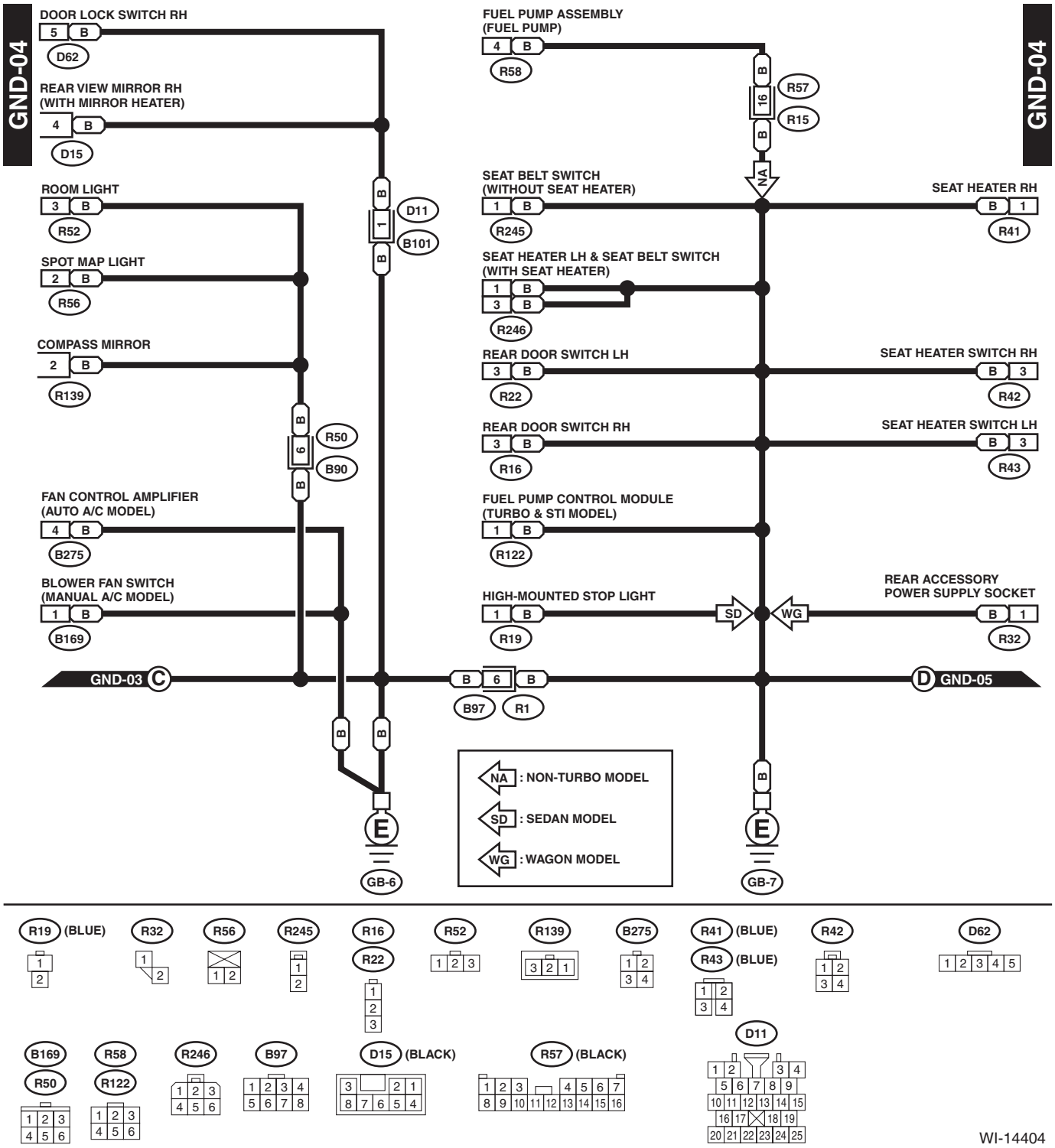
GND-04
DOOR LOCK SWITCH RH
5 B
D62
REAR VIEW MIRROR RH
(WITH MIRROR HEATER)
4 B
D15
ROOM LIGHT
3 B
R52
SPOT MAP LIGHT
2 B
R56
COMPASS MIRROR
2 B
R139
FAN CONTROL AMPLIFIER
(AUTO A/C MODEL)
4 B
B275
BLOWER FAN SWITCH
(MANUAL A/C MODEL)
1 B
B169
B 1 B
D11
B101
B 6 B
R50
B90
GND-03 C
B 6 B
B97 R1
E
GB-6
FUEL PUMP ASSEMBLY
(FUEL PUMP)
4 B
R58
B 16 B
R57
R15
NA
SEAT BELT SWITCH
(WITHOUT SEAT HEATER)
1 B
R245
SEAT HEATER LH & SEAT BELT SWITCH
(WITH SEAT HEATER)
1 B
3 B
R246
REAR DOOR SWITCH LH
3 B
R22
REAR DOOR SWITCH RH
3 B
R16
FUEL PUMP CONTROL MODULE
(TURBO & STI MODEL)
1 B
R122
HIGH-MOUNTED STOP LIGHT
1 B
R19
SD
WG
SEAT HEATER RH
B 1
R41
SEAT HEATER SWITCH RH
B 3
R42
SEAT HEATER SWITCH LH
B 3
R43
REAR ACCESSORY
POWER SUPPLY SOCKET
B 1
R32
D GND-05
NA : NON-TURBO MODEL
SD : SEDAN MODEL
WG : WAGON MODEL
E
GB-7
R19 (BLUE)
R32
R56
R245
R16
R22
R52
R139
B275
R41 (BLUE)
R43 (BLUE)
R42
D62
B169
R50
R58
R122
R246
B97
D15 (BLACK)
R57 (BLACK)
D11
WI-14404

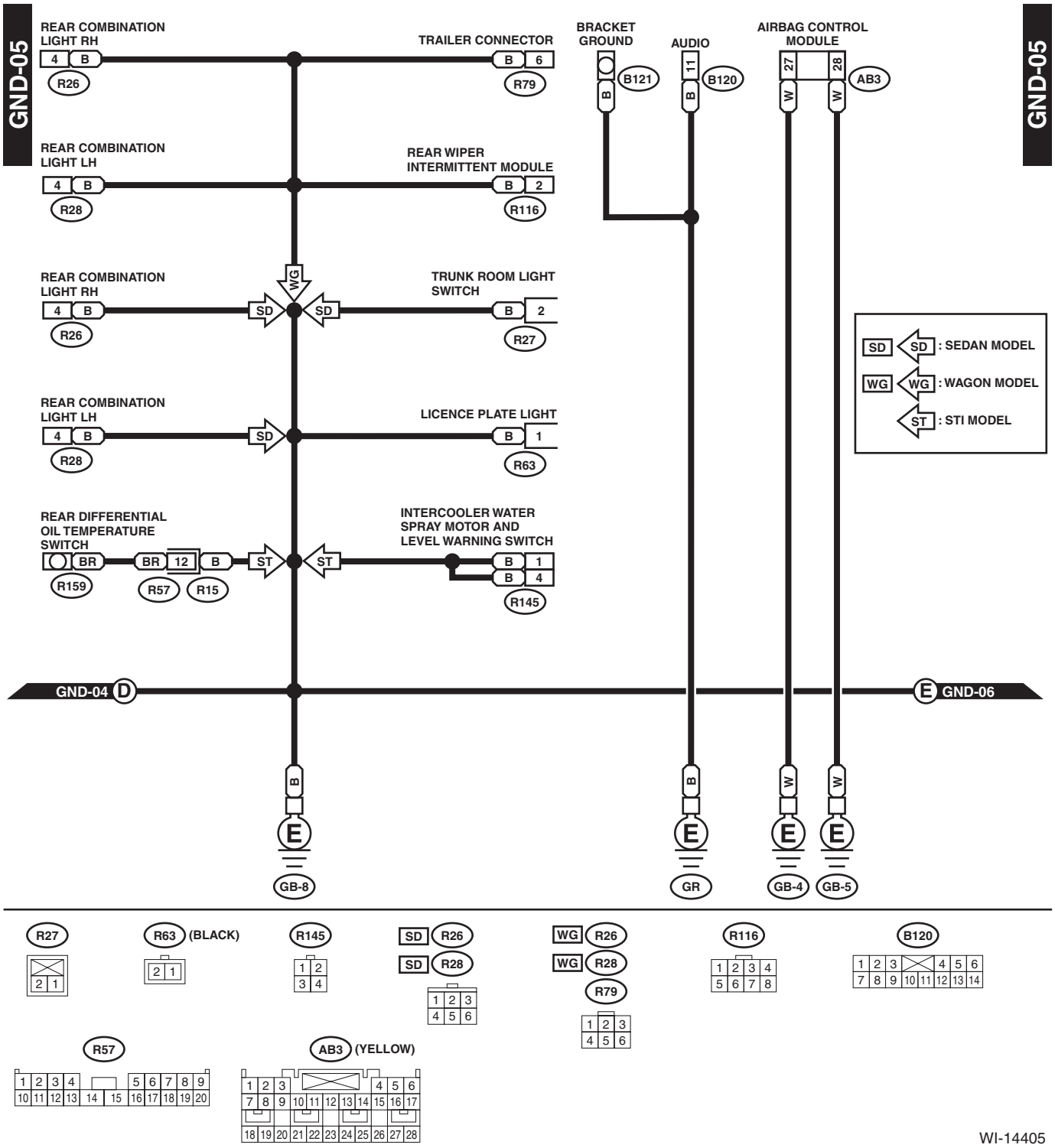
GND-05
REAR COMBINATION LIGHT RH
4 B
R26
TRAILER CONNECTOR
B 6
R79
BRACKET GROUND
B121
AUDIO
11 B
B120
AIRBAG CONTROL MODULE
27 28
W W
AB3
GND-05
REAR COMBINATION LIGHT LH
4 B
R28
REAR WIPER INTERMITTENT MODULE
B 2
R116
REAR COMBINATION LIGHT RH
4 B
R26
WG
SD
SD
TRUNK ROOM LIGHT SWITCH
B 2
R27
SD : SEDAN MODEL
WG : WAGON MODEL
ST : STI MODEL
REAR COMBINATION LIGHT LH
4 B
R28
SD
LICENCE PLATE LIGHT
B 1
R63
REAR DIFFERENTIAL OIL TEMPERATURE SWITCH
BR
R159
BR 12 B
R57 R15
ST
ST
INTERCOOLER WATER SPRAY MOTOR AND LEVEL WARNING SWITCH
B 1
B 4
R145
GND-04 D
E GND-06
B
E
GB-8
B
E
GR
W
E
GB-4
W
E
GB-5
R27
2 1
R63 (BLACK)
2 1
R145
1 2
3 4
SD R26
SD R28
1 2 3
4 5 6
WG R26
WG R28
R79
1 2 3
4 5 6
R116
1 2 3 4
5 6 7 8
B120
1 2 3 4 5 6
7 8 9 10 11 12 13 14
R57
1 2 3 4 5 6 7 8 9
10 11 12 13 14 15 16 17 18 19 20
AB3 (YELLOW)
1 2 3 4 5 6
7 8 9 10 11 12 13 14 15 16 17
18 19 20 21 22 23 24 25 26 27 28
WI-14405

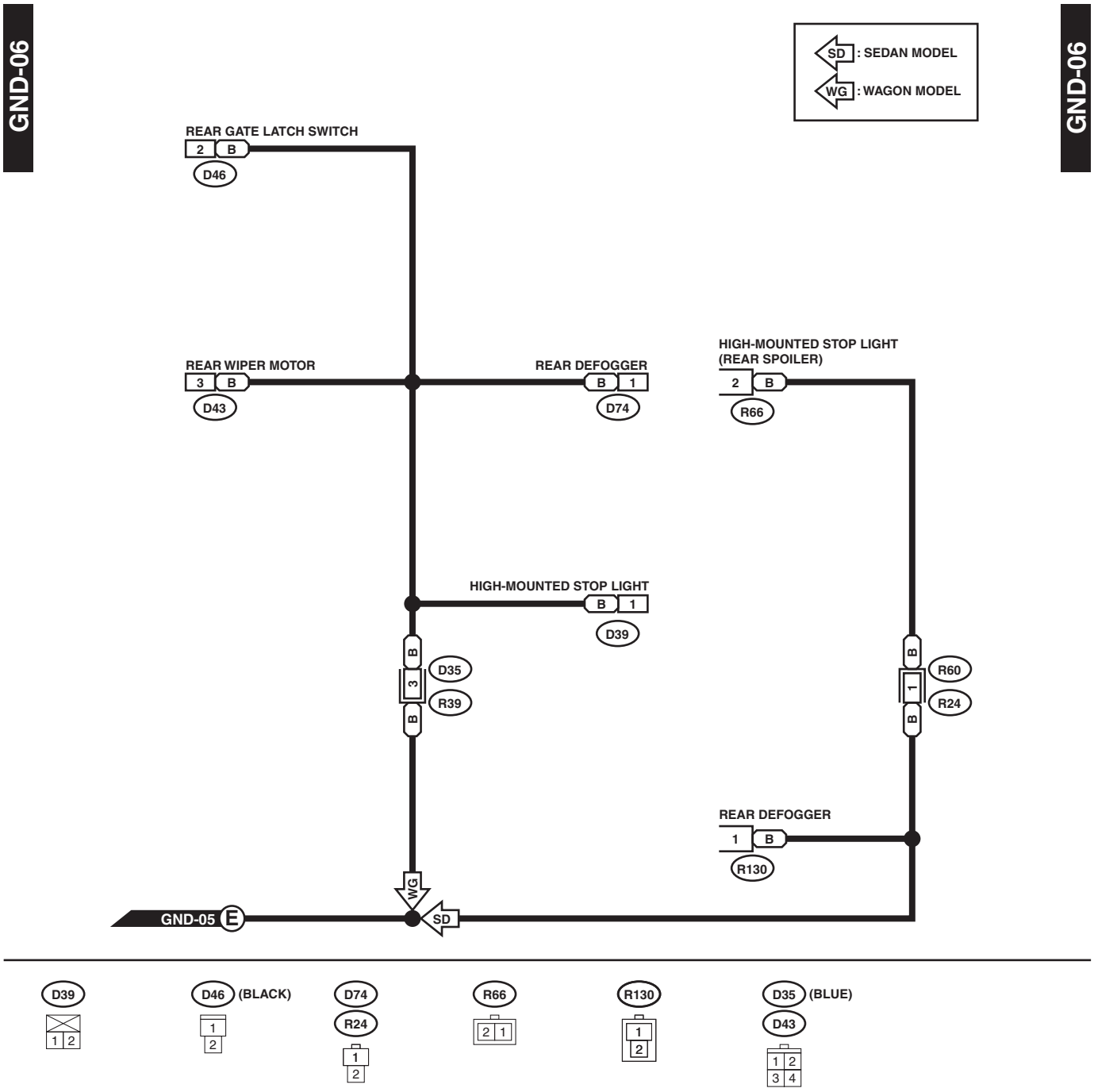
GND-06
GND-06
SD : SEDAN MODEL
WG : WAGON MODEL
REAR GATE LATCH SWITCH
2 B
D46
REAR WIPER MOTOR
3 B
D43
REAR DEFOGGER
B 1
D74
HIGH-MOUNTED STOP LIGHT
(REAR SPOILER)
2 B
R66
HIGH-MOUNTED STOP LIGHT
B 1
D39
B
3
B
D35
R39
B
1
B
R60
R24
REAR DEFOGGER
1 B
R130
WG
SD
GND-05 E
D39
1 2
D46 (BLACK)
1
2
D74
R24
1
2
R66
2 1
R130
1
2
D35 (BLUE)
D43
1 2
3 4

WI-14406

2. AT TRANSMISSION GROUND

GND-07

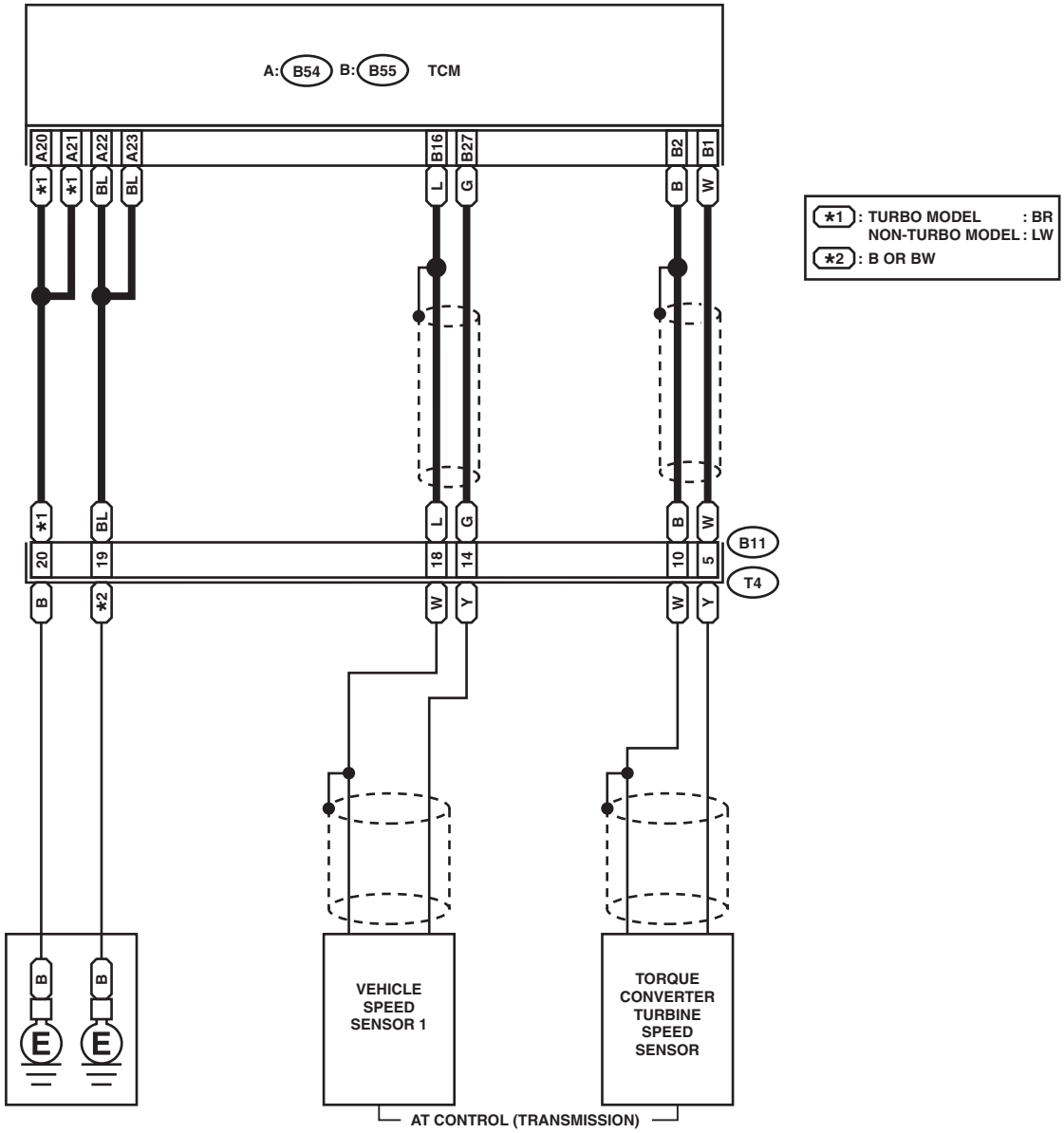

GND-07

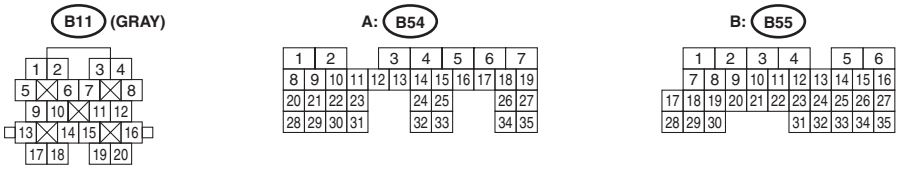

WI-14407

3. ENGINE GROUND (NON-TURBO MODEL)

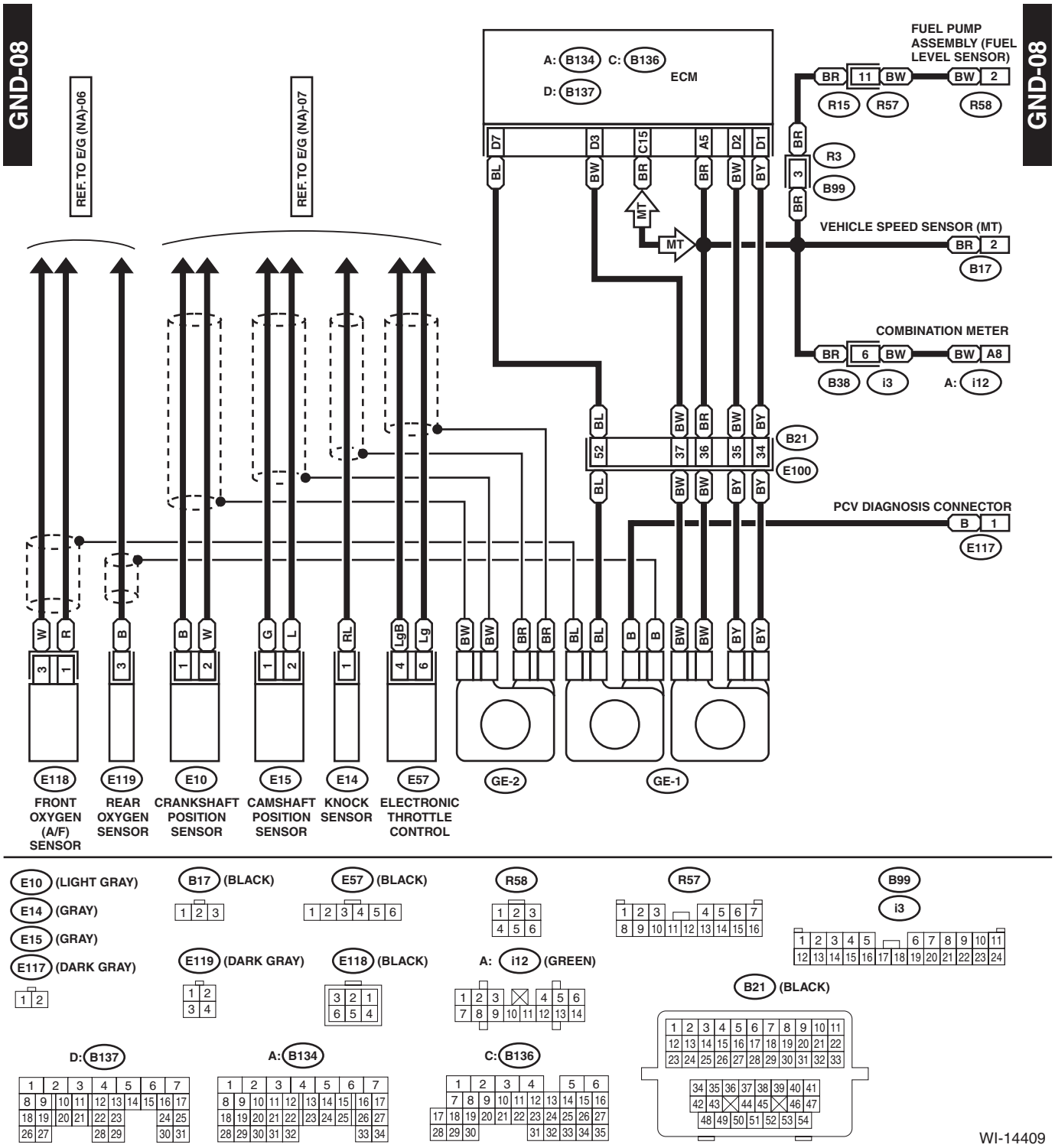

4. ENGINE GROUND (TURBO MODEL)

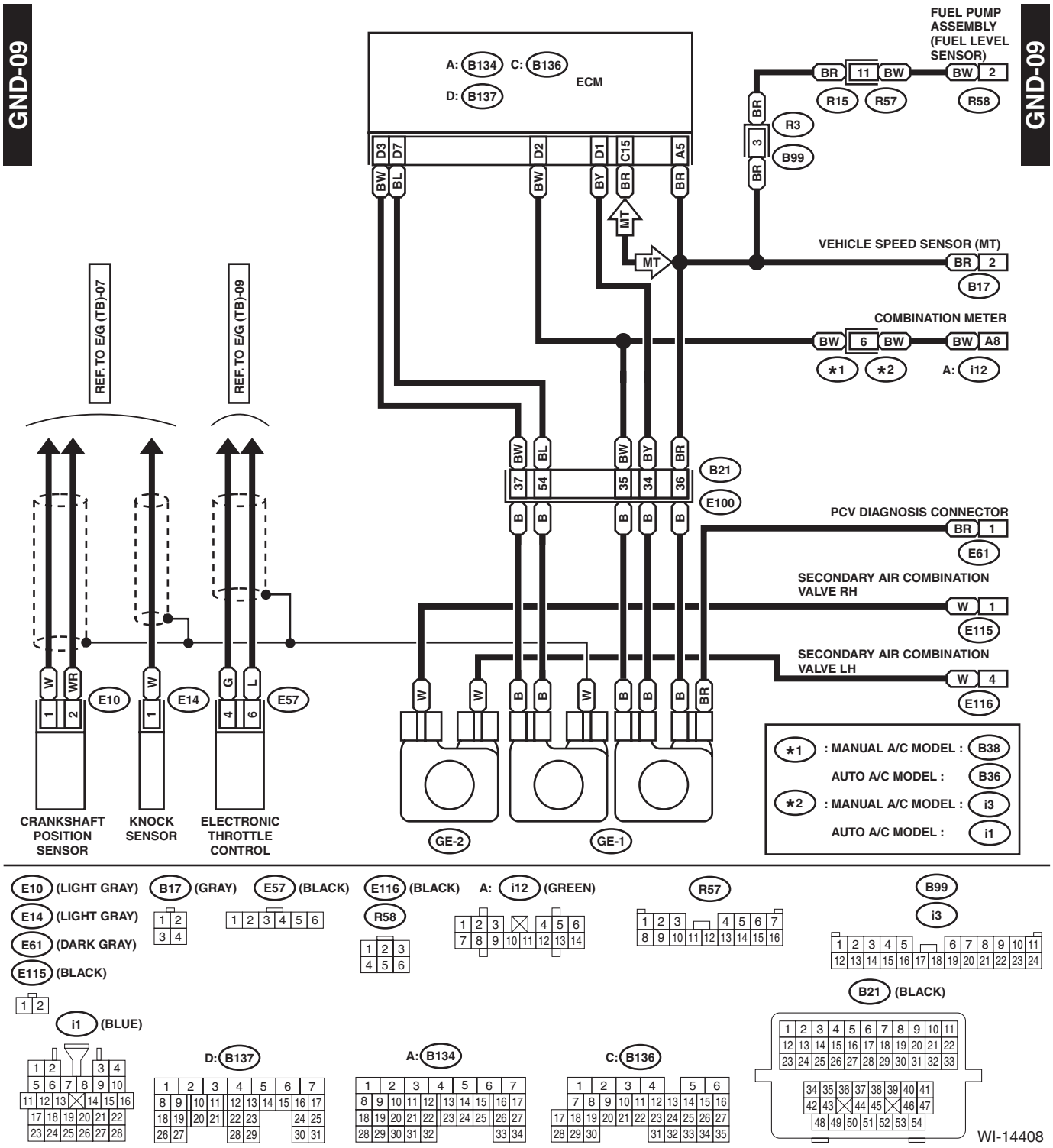
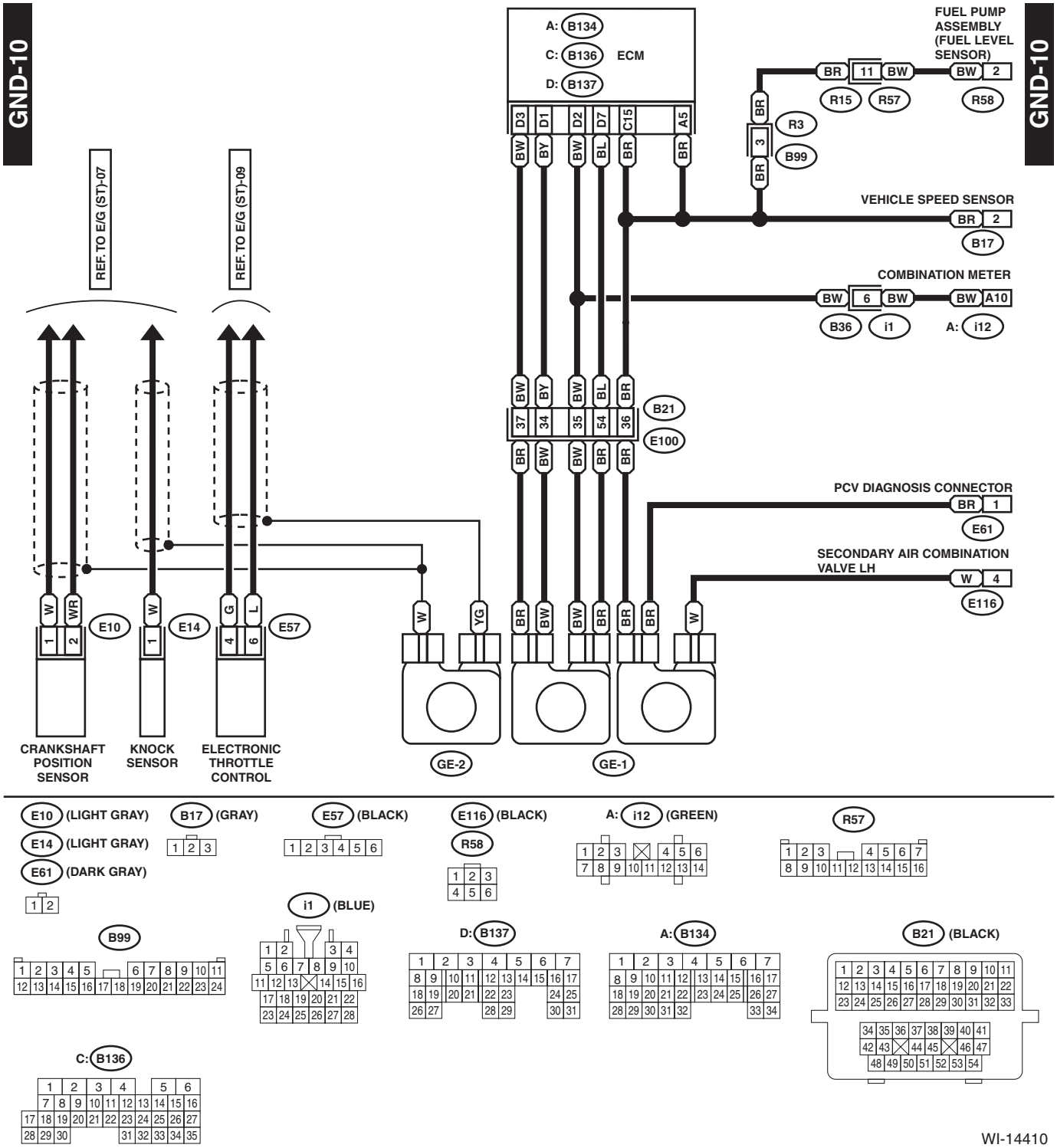
5. ENGINE GROUND (STI MODEL)